UNIVERSITY OF CAMBRIDGE INTERNATIONAL EXAMINATIONS
General Certificate of Education
Advanced Subsidiary Level and Advanced Level

CANDIDATE NAME

CENTRE NUMBER

CANDIDATE NUMBER

8960582827

PHYSICS **9702/32**

Paper 32 Advanced Practical Skills 2 **May/June 2009**

2 hours

Candidates answer on the Question Paper.

Additional Materials: As listed in the Confidential Instructions.

READ THESE INSTRUCTIONS FIRST

Write your Centre number, candidate number and name on all the work you hand in.
Write in dark blue or black pen.
You may use a soft pencil for any diagrams, graphs or rough working.
Do not use staples, paper clips, highlighters, glue or correction fluid.
DO **NOT** WRITE IN ANY BARCODES.

Answer **both** questions.
You will be allowed to work with the apparatus for a maximum of one hour for each question.
You are expected to record all your observations as soon as these observations are made, and to plan the presentation of the records so that it is not necessary to make a fair copy of them. The working of the answers is to be handed in.
Additional answer paper and graph paper should be submitted only if it becomes necessary to do so.
You are reminded of the need for good English and clear presentation in your answers.

At the end of the examination, fasten all your work securely together.
All questions in this paper carry equal marks.

For Examiner's Use	
1	
2	
Total	

This document consists of **10** printed pages and **2** blank pages.

© UCLES 2009

UNIVERSITY of CAMBRIDGE International Examinations

[Turn over

BLANK PAGE

You may not need to use all of the materials provided.

For Examiner's Use

1 In this experiment, a tube is suspended from a length of wool. The tube will be rotated. You will investigate how the time taken for the rotating tube to momentarily come to rest depends on the length of the wool holding the tube.

Attach the wool to the middle of the tube making use of the groove on the tube to position the wool correctly. Clamp the other end of the wool securely using the two wooden blocks. The length l should be 50 cm, as shown in Fig. 1.1.

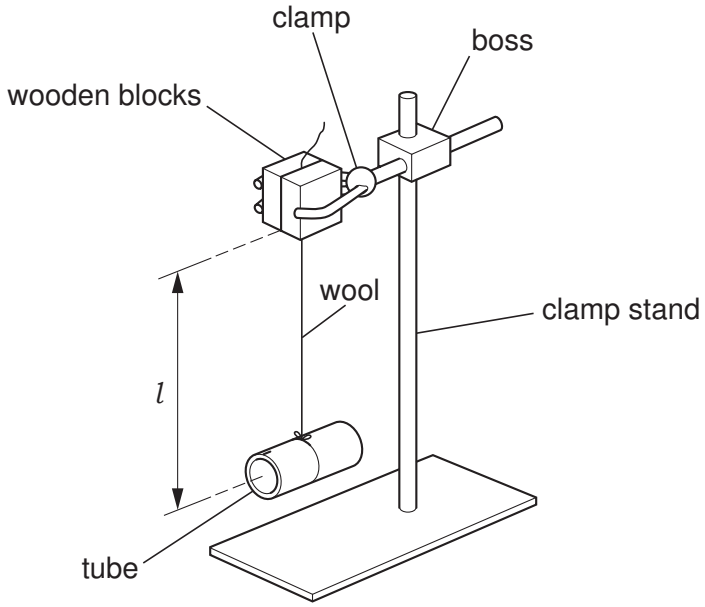

Fig. 1.1

(a) (i) Keeping the wool taut and the tube horizontal, turn the tube through ten complete turns in order to twist the wool, as shown in Fig. 1.2.

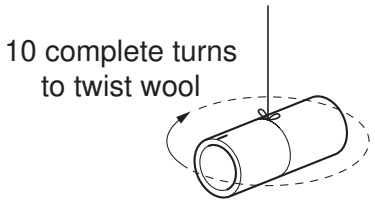

Fig. 1.2

The mark at one end of the tube is to help you count complete turns.

(ii) When you release the tube, the wool will untwist and then twist again, before coming to rest momentarily. It will then untwist in the other direction.

Release the tube, and measure and record the time t taken for the tube to come to rest momentarily for the first time.

t = ...

(b) Change l and repeat **(a)(i)** and **(a)(ii)** until you have six sets of values for l and t. l should be in the range 10 cm to 50 cm.

Include values of $\sqrt{l}$ in your table of results.

For Examiner's Use

(c) **(i)** Plot a graph of t on the y-axis against $\sqrt{l}$ on the x-axis. Draw the line of best fit.

(ii) Determine the gradient and y-intercept of this line.

gradient = ...

y-intercept = ...

© UCLES 2009

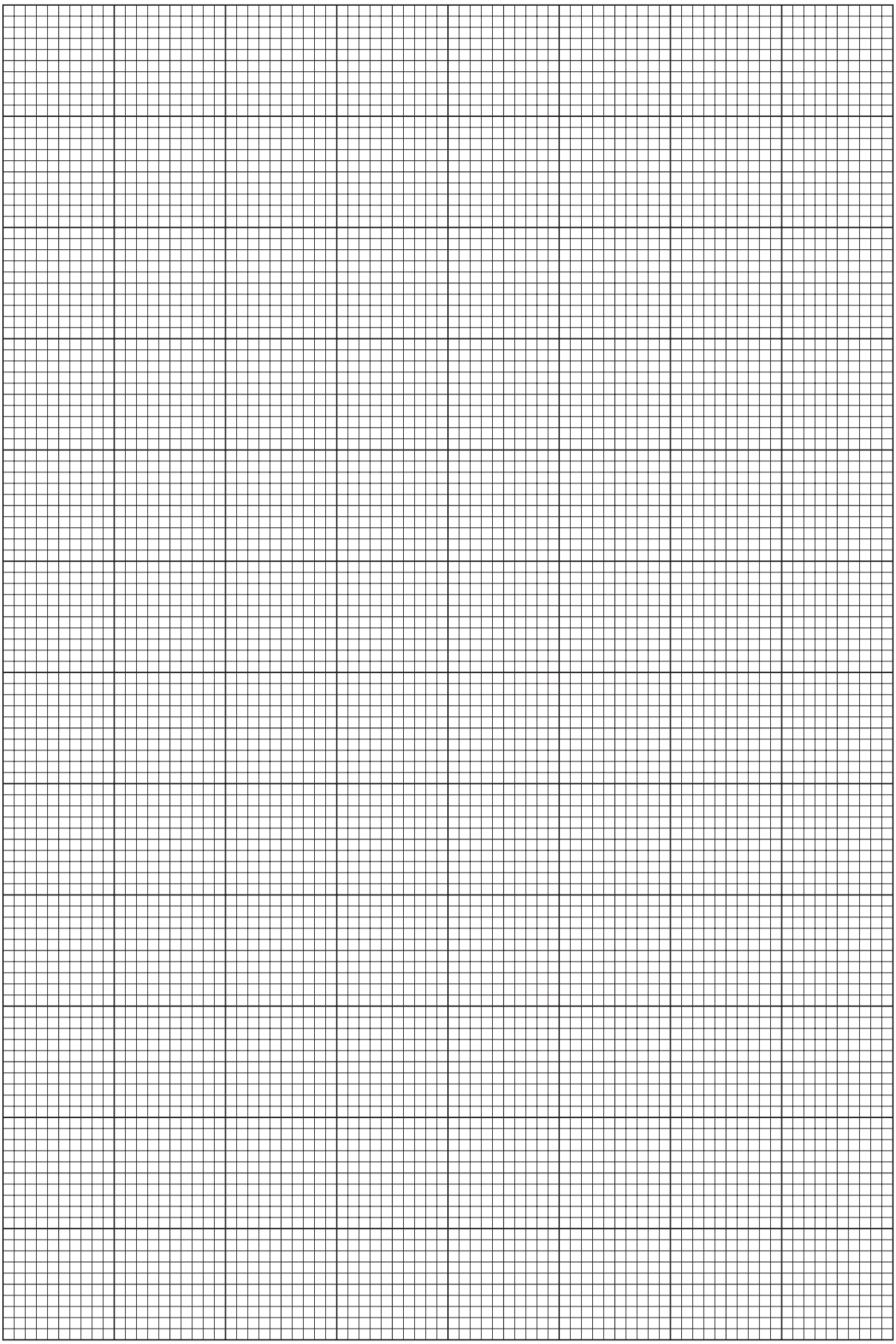

For Examiner's Use

(d) It is suggested that the relationship between l and t is

$$t = p\sqrt{l} + k$$

where p and k are constants.

Use your answers from **(c)(ii)** to determine values for p and k. Give appropriate units.

For Examiner's Use

p = ...

k = ...

You may not need to use all of the materials provided.

For Examiner's Use

2 In this experiment, you will investigate how the deflection at the centre of the loaded resistance wire of the arrangement shown in Fig. 2.1 depends on the current in the wire.

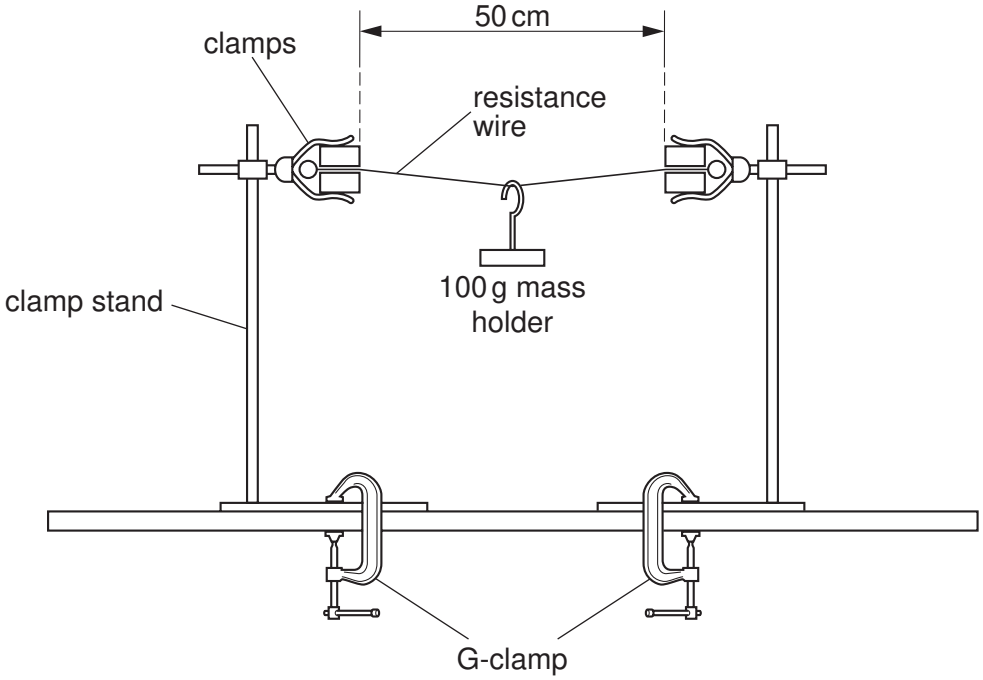

Fig. 2.1

The apparatus has been set up for you. The resistance wire is held firmly between the clamps. Do not make any adjustments to the bosses, clamps or G-clamps.

You should wear safety goggles throughout.

(a) Connect 45 cm of resistance wire, an ammeter and a 12 V variable power supply in series, as shown in Fig. 2.2. Use the crocodile clips available to make electrical contact with the measured length of the resistance wire.

For Examiner's Use

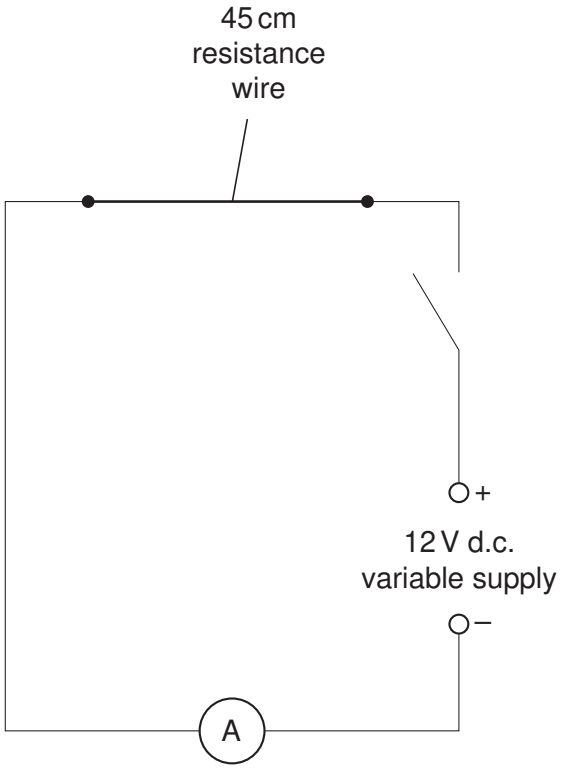

Fig. 2.2

(b) **(i)** With the switch open, measure the height of the bottom of the mass holder above the bench.

height = ...

(ii) Explain how you ensure the accuracy of this reading of the height.

.....

.....

.....

For Examiner's Use

(c) (i) Close the switch and vary the power supply until the current I in the circuit is about 1.2 A. Do not touch the resistance wire, as it will be hot.

Measure and record this value of I.

I = ... A

(ii) With the switch closed, measure and record the new height of the bottom of the mass holder above the bench. Open the switch.

new height = ...

(iii) Calculate the deflection x of the resistance wire, caused by the current in the circuit. (The deflection is equal to the change in height of the mass holder above the bench.)

x = ...

(iv) Estimate the percentage uncertainty in x.

percentage uncertainty = ...

(d) (i) Repeat **(b)(i)**, to check the height of the bottom of the mass holder above the bench, with the switch open.

height = ...

(ii) Close the switch and vary the power supply to use a different current, less than 1.2 A. Record your new value of I.

For Examiner's Use

I = ... A

(iii) Repeat **(c)(ii)** and **(c)(iii)** to find the new deflection of the resistance wire, caused by the new current in the circuit.

new height = ...

x = ...

(e) It is suggested that I is proportional to x. Explain whether the results of your experiment support this idea.

.....

.....

.....

.....

.....

(f) **(i)** State four sources of error or limitations of the procedure in this experiment.

For Examiner's Use

1. .....

.....

2. .....

.....

3. .....

.....

4. .....

.....

(ii) Suggest four improvements that could be made to this experiment. You may suggest the use of other apparatus or different procedures.

1. .....

.....

2. .....

.....

3. .....

.....

4. .....

.....

© UCLES 2009

BLANK PAGE

Permission to reproduce items where third-party owned material protected by copyright is included has been sought and cleared where possible. Every reasonable effort has been made by the publisher (UCLES) to trace copyright holders, but if any items requiring clearance have unwittingly been included, the publisher will be pleased to make amends at the earliest possible opportunity.

University of Cambridge International Examinations is part of the Cambridge Assessment Group. Cambridge Assessment is the brand name of University of Cambridge Local Examinations Syndicate (UCLES), which is itself a department of the University of Cambridge.